Customer _____

Rep initials _____ Date _____

Address/ contact _____

_____

Door location _____

Door width = _____

Track length = _____

One Door per Form

CS® FOR DOORS

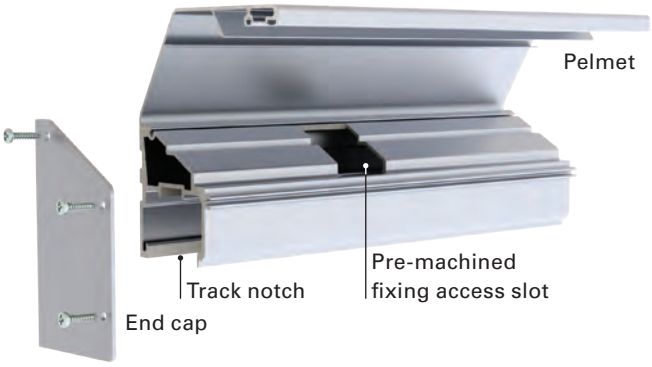

Single Plan

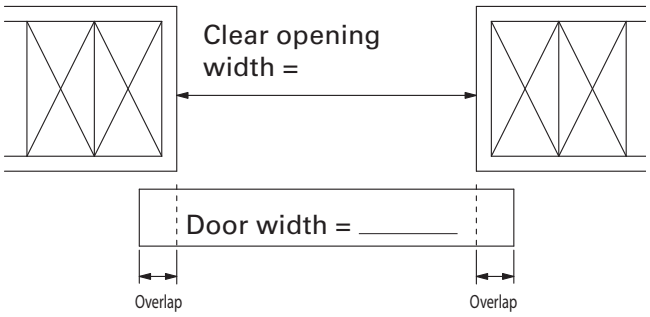

Requires 1x M6/M8 or SofStop wheel pack (sold separately)

Standard pack contents:

- 2x M6 (2 wheel) or M8 (4 wheel) carriages and SmartMount plates with stops
- Screw pack
- 1 x Floor guide
- 2 x Track stops

SofStop®

☐ Soft close ☐ Soft Open

Who is supplying the door?

☐ **Cust.** ☐ **CS** ☐ **No door**

Door diagram

Door

Type _____

Finish _____

Glass _____

H/W _____

H/W height _____

Elevation

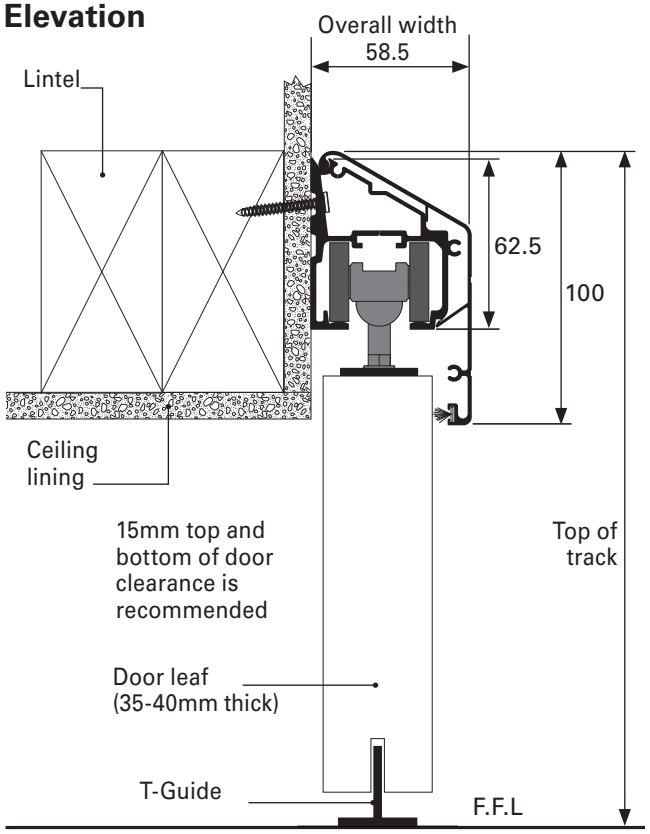

Door Height Calculation

Top of track (F.F.L only) _____

Less track height (62mm) _____

Less clearance above door (15mm suggested) _____

Less below door clearance (15mm suggested) _____

Door height = _____

Door Width Calculation

Clear opening _____

+ (overlap x 2) _____

= Door width _____

Signed by CS rep _____

Rep's contact no. _____

Signed by (or on behalf of customer) _____

Print name _____

Please contact your rep for job progress enquiries or contact your nearest office:

Auckland Head Office
T 09 276 0800
E salesakl@csfordoors.co.nz

Waikato
T 07 928 0800
E salesbop@csfordoors.co.nz

Christchurch
T 03 348 6158
E saleschch@csfordoors.co.nz

WallMountTrack™ Site Measure - Single - Door closing alongside wall

©Cavity Sliders Ltd. 60309/1 Site Measure WallMount Track 11.2023

Customer _____

Rep initials _____ Date _____

Address/ contact _____

_____

Door location _____

One Door per Form

FOR DOORS

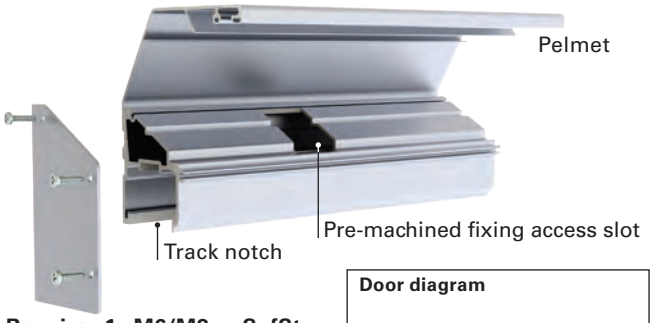

Door width = _____

Track length = _____

Requires 1x M6/M8 or SofStop wheel pack (sold separately)

Standard pack contents:

- 2x M6 (2 wheel) or M8 (4 wheel) carriages and SmartMount plates with stops
- Screw pack
- 1 x Floor guide
- 2 x Track stops

SofStop®

☐ Soft close ☐ Soft Open

Who is supplying the door?

☐ **Cust.** ☐ **CS** ☐ **No door**

Door diagram

Door

Type _____

Finish _____

Glass _____

H/W _____

H/W height _____

Single Plan

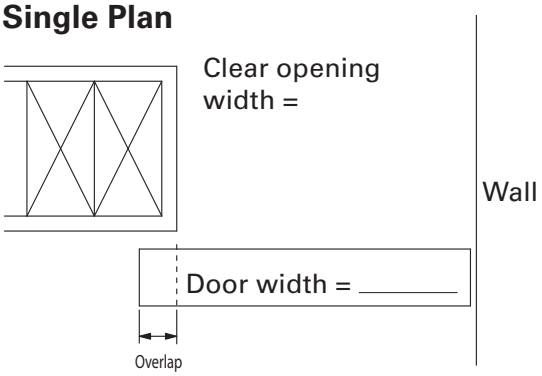

Elevation

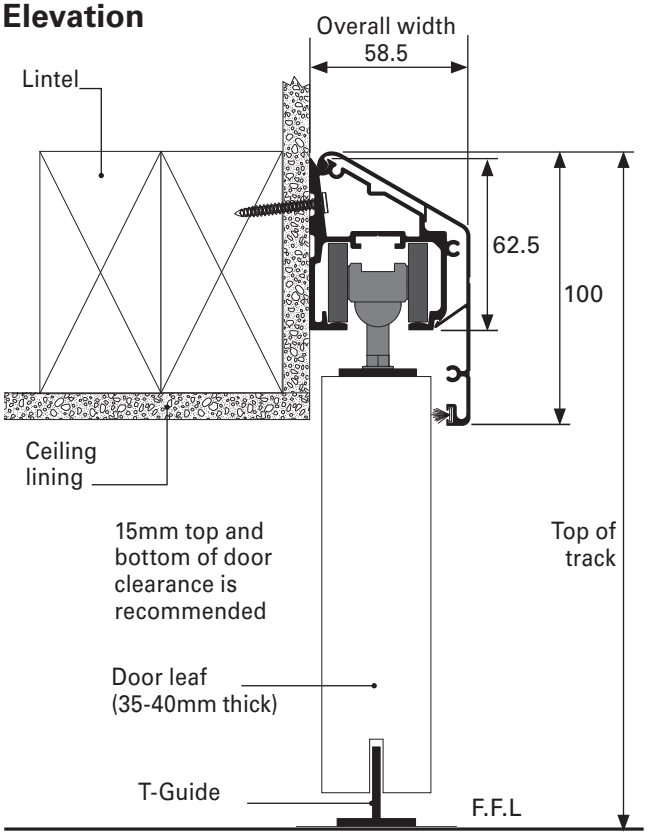

Door Height Calculation

Top of track (F.F.L only) _____

Less track height (62mm) _____

Less clearance above door (15mm suggested) _____

Less below door clearance (15mm suggested) _____

Door height = _____

Door Width Calculation

Clear opening _____

+ overlap _____

Door width = _____

Track Length Calculation

(DW x 2) _____

- overlap _____

Track length = _____

Signed by CS rep _____

Rep's contact no. _____

Signed by (or on behalf of customer) _____

Print name _____

Please contact your rep for job progress enquiries or contact your nearest office:

Auckland Head Office
T 09 276 0800
E salesakl@csfordoors.co.nz

Waikato
T 07 928 0800
E salesbop@csfordoors.co.nz

Christchurch
T 03 348 6158
E saleschch@csfordoors.co.nz

WallMountTrack™ Site Measure - Single - Door closing onto wall

©Cavity Sliders Ltd. 60309/2 Site Measure WallMount Track 11.2023

Customer _____

Rep initials _____ Date _____

Address/ contact _____

_____

Door location _____

Door width = _____

Track length = _____

One Door per Form

FOR DOORS

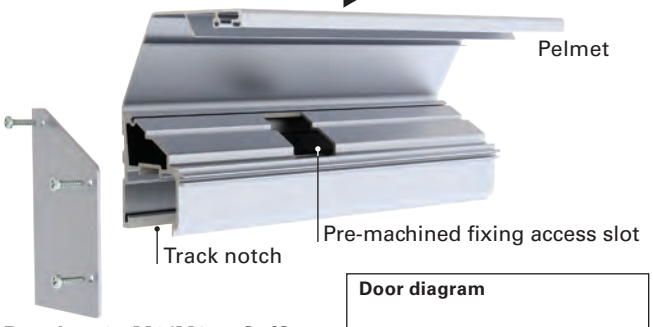

Requires 2x M6/M8 or SofStop wheel packs (sold separately)

Standard pack contents:

- 2x M6 (2 wheel) or M8 (4 wheel) carriages and SmartMount plates with stops
- Screw pack
- 1 x Floor guide
- 2 x Track stops

SofStop®

☐ Soft close ☐ Soft Open

Who is supplying the door?

☐ **Cust.** ☐ **CS** ☐ **No door**

Door diagram

Door

Type _____

Finish _____

Glass _____

H/W _____

H/W height _____

Bi-Parting Plan

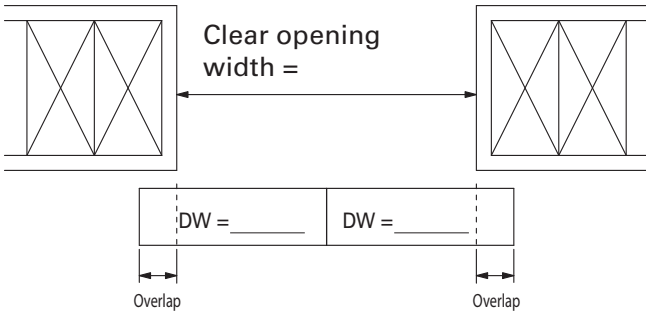

Elevation

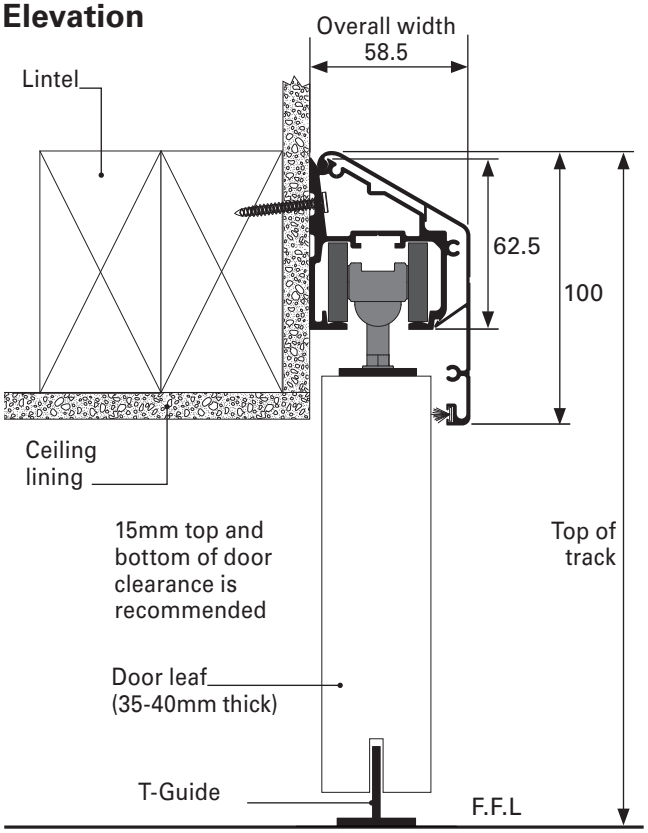

Door Height Calculation

Top of track (F.F.L only) _____

Less track height (62mm) _____

Less clearance above door (15mm suggested) _____

Less below door clearance (15mm suggested) _____

Door height = _____

Door Width Calculation

Clear opening + (overlap x 2) _____

÷ 2 _____

Door width = _____

Track Length Calculation

(DW x 4) _____

- (2 x overlap) _____

Track length = _____

Signed by CS rep _____

Rep's contact no. _____

Signed by (or on behalf of customer) _____

Print name _____

Please contact your rep for job progress enquiries or contact your nearest office:

Auckland Head Office
T 09 276 0800
E salesakl@csfordoors.co.nz

Waikato
T 07 928 0800
E salesbop@csfordoors.co.nz

Christchurch
T 03 348 6158
E saleschch@csfordoors.co.nz

WallMountTrack™ Site Measure - BiParting - Doors closing alongside wall

©Cavity Sliders Ltd. 60309/3 Site Measure WallMount Track 11.2023